hockey pucks

weather and vandal resistant

designplan

tech-spec

technical data sheet

hp1

. Heavy wall extruded aluminum housing 6063-T6
. Internal “barrels” for strength and heat sinks
. Stainless steel trim ring
. .4” thich tempered glass lens
. Remote 24V DC power supply
. UL,cUL listed wet label IP65
. Low copper alloy cast aluminum mounting device.
. Can be mounted over stubbed conduit and bolted to ceiling.
. Stainless steel tamper resistant screws

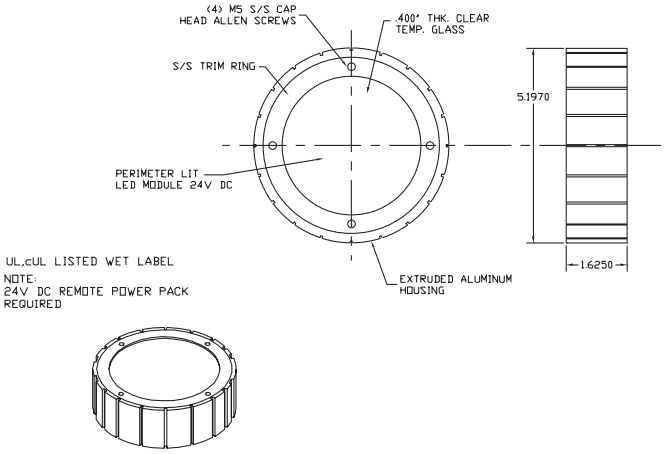

hp1 hockey puck

LED MODULES SUPPLIED

SERIES	PROD.ID XXX	LAMP X	WATTAGE XX	BODY X	FINISH XX	BAFFLE X	BALLAST X	LENS X	OPTIONS XX
HP1 HOCKEY PUCK	HP1	L-Led Module	**P1**- Green Led Edge Lit Module **M9**- Red Led Edge Lit Module **U3**- Blue Led Edge Lit Module **U4**- Yellow Led Edge Lit Module **V1**- White Led Edge Lit Module	**1**- Surface MT No Conduit Entries **NOTE:** Fixture mounts over stubbed conduit, bolted to wall or directly to recessed J box.	**01**- Semi Gloss White **02**- Black Suede **04**- Bronze **05**- Hammered Bronze **07**- Hammered Copper **10**- Matte Silver **17**- Granite **47**- Weathered Bronze **48**- Weathered Moss **49**- Good Earth **80**- Weathered Copper **81**- Weathered Iron **82**- Hammered Gunmetal **83**- Metallic Silver **84**- Aluminum Painted **85**- Terracotta **86**- Metallic Gold **87**- Chrome **88**- Quick Silver **89**- Zinc Gray **BA**- Brushed Aluminum	**S**-Stainless Steel	**R**- Remote 120V TO 24V DC Power Pack	**T**-Clear Tempered Glass Lens	**0**-None

designplan
79 Trenton Avenue
Frenchtown, NJ 08825
Tel: (908) 996-7710
Fax:(908) 996-7042

hp2

. Heavy wall extruded aluminum housing 6063-T6
. Internal “barrels” for strength and heat sinks
. Stainless steel trim ring
. .4” thich tempered glass lens
. Remote 24V DC power supply
. UL,cUL listed wet label IP65
. Low copper alloy cast aluminum mounting device.
. Can be mounted over stubbed conduit and bolted to ceiling.
. Stainless steel tamper resistant screws

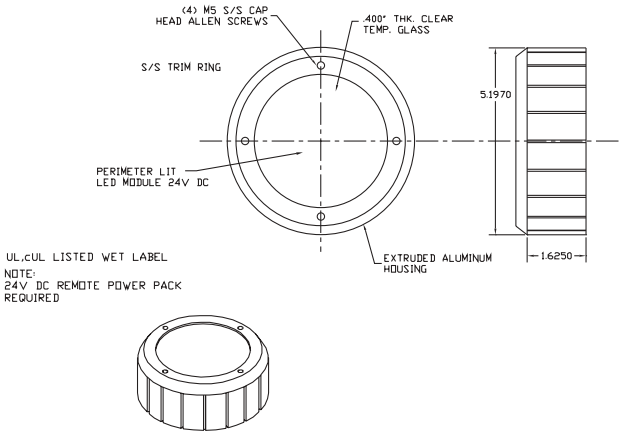

hp2 hockey puck

LED MODULES SUPPLIED

SERIES	PROD.ID XXX	LAMP X	WATTAGE XX	BODY X	FINISH XX	BAFFLE X	BALLAST X	LENS X	OPTIONS XX
HP2 HOCKEY PUCK	HP2	L-Led Module	**P1**- Green Led Edge Lit Module **M9**- Red Led Edge Lit Module **U3**- Blue Led Edge Lit Module **U4**- Yellow Led Edge Lit Module **V1**- White Led Edge Lit Module	**1**- Surface MT No Conduit Entries **NOTE:** Fixture mounts over stubbed conduit, bolted to wall or directly to recessed J box.	**01**- Semi Gloss White **02**- Black Suede **04**- Bronze **05**- Hammered Bronze **07**- Hammered Copper **10**- Matte Silver **17**- Granite **47**- Weathered Bronze **48**- Weathered Moss **49**- Good Earth **80**- Weathered Copper **81**- Weathered Iron **82**- Hammered Gunmetal **83**- Metallic Silver **84**- Aluminum Painted **85**- Terracotta **86**- Metallic Gold **87**- Chrome **88**- Quick Silver **89**- Zinc Gray **BA**- Brushed Aluminum	**S**-Stainless Steel	**R**-Remote 120V TO 24V DC Power Pack	**T**-Clear Tempered Glass Lens	**0**-None

designplan
79 Trenton Avenue
Frenchtown, NJ 08825
Tel: (908) 996-7710
Fax:(908) 996-7042

related items:

itsy, bitsy
Section 7

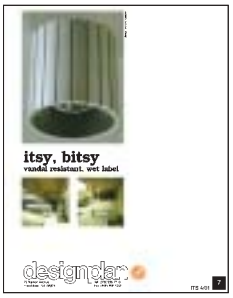

hockey pucks
Section 2

designplan

79 Trenton Avenue
Frenchtown, NJ 08825

Tel: (908) 996-7710
Fax: (908) 996-7042

Designplan Lighting Ltd., Kimpton Industrial Estate, Sutton, Surrey, UK SM3 9RW TEL 44-0181-254-2000 FAX 44-0181-644-4253
Designplan B.V., Nijerheidsweg 26, 1442 LD Purmerend, Netherlands TEL 31-0299-426957 FAX 31-0299-424979
www. designplan.com